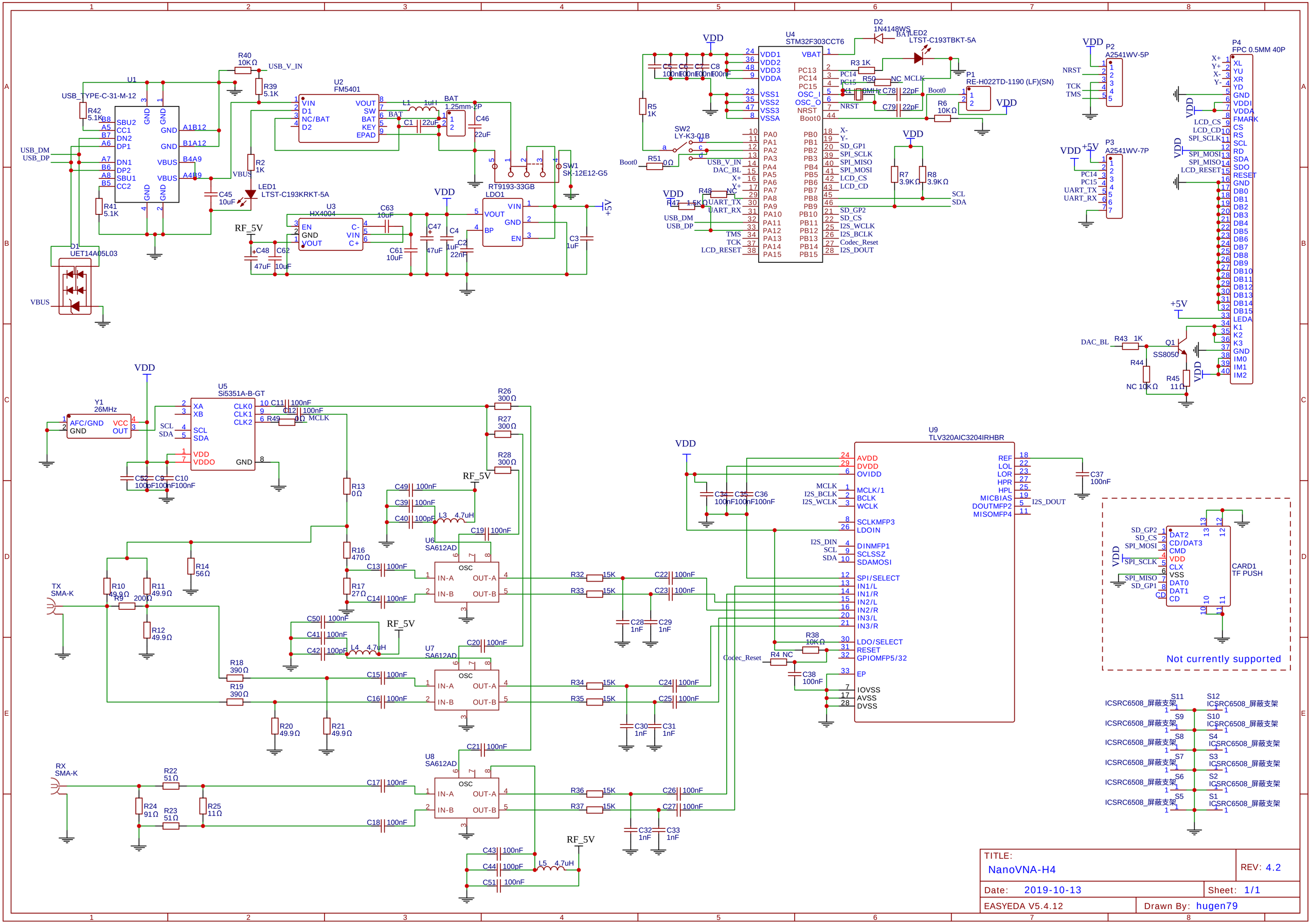

U1
USB_TYPE-C-31-M-12
U2
FM5401
U3
HX4004
U4
STM32F303CCT6
U5
Si5351A-B-GT
U6
SA612AD
U7
SA612AD
U8
SA612AD
U9
TLV320AIC3204IRHBR
D1
UET14A05L03
D2
1N4148WS
LED1
LTST-C193KRKT-5A
LED2
LTST-C193TBKT-5A
P1
RE-H022TD-1190 (LF)(SN)
P2
A2541WV-5P
P3
A2541WV-7P
P4
FPC 0.5MM 40P
Q1
SS8050
SW1
SK-12E12-G5
SW2
LY-K3-01B
Y1
26MHz
TX
SMA-K
RX
SMA-K
CARD1
TF PUSH
Not currently supported
ICSRC6508_屏蔽支架
TITLE:
NanoVNA-H4
REV: 4.2
Date: 2019-10-13
Sheet: 1/1
EASYEDA V5.4.12
Drawn By: hugen79